Ircon® System Solutions – *Power*

Coal Fired – Fly Ash

Customer

Coal Fired Power Plants

SIC code

4911

Customer Needs

In the power industry coal is a major source of fuel. Often the coal used has high sulphur content. This type of coal creates a large amount of fly ash. If the fly ash is not kept hot enough in the boiler the ash will stick to the tubes and act as an insulator reducing the efficiency of the boiler. In addition the fly ash can build up so thick it can form huge balls which break loose and fall into the boiler and destroy other tubes. This ball can weight as much as 2 tons. (1800 kg).

The solution to the problem is to measure the hot fly ash in the tube area of the boiler. If the ash is not the right temperature the operators can increase the firing or add cleaner fuel to increase the temperature. Since the gases in the boiler are full of fly ash they are opaque to any infrared thermometer. The ash temperature could be measured with Modline 5R series. The InfraRail type S would also work. Be sure to add an air purge and water-cooling. Usually at least two instruments are installed, one on each side of the boiler.

Features/Benefits to address

Product

- InfraRail type S or Modline 5R depending on the space requirements of the customer
- Air purge and water cooling for the environment around the boiler

Application

- Controlling the fly ash temperature prevents coating the fire tubes which lowers the efficiency of the boiler
- Temperature control will prevent major damage to the boiler tubes

Who to talk to?

1. Plant Manager
2. Instrument Techs
3. Corporate engineering offices

What to take?

1. Modline 5R or InfraRail Demo and related literature

Application

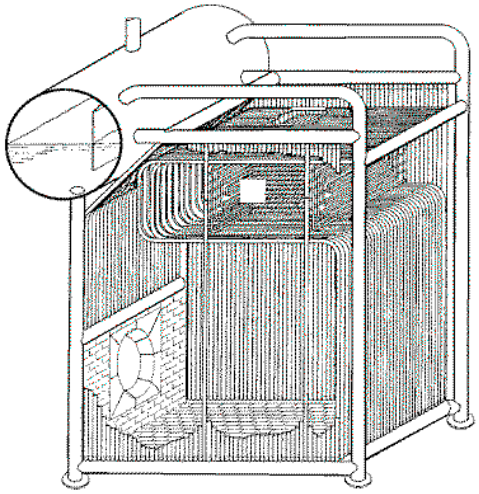

Example of the internals of a boiler. The tubes (called risers and downcomers) are effected by fly ash buildup

Names of customer

Contact your local power utility. Coal is the fuel of choice for most big power utilities in the US (look for coal piles outside the plant if you are unsure). Look for older plants. Many colleges, large production plants, and paper mills may also have coal fired boilers. Often these power plants have become highly automated and may have very little in the way of staff. These engineers and technicians may be looking for advice to improve.

Another source of business are engineering and consulting firms that work with local utilities. These firms often have I&C (Instrumentation and Control) engineers that work specifically on instrumentation for new projects.

IRCON®

A Fluke Company